Direl-Biss Hydro

DELTA ELEVATOR 2 Stop MICROPROCESSOR CONTROLLER

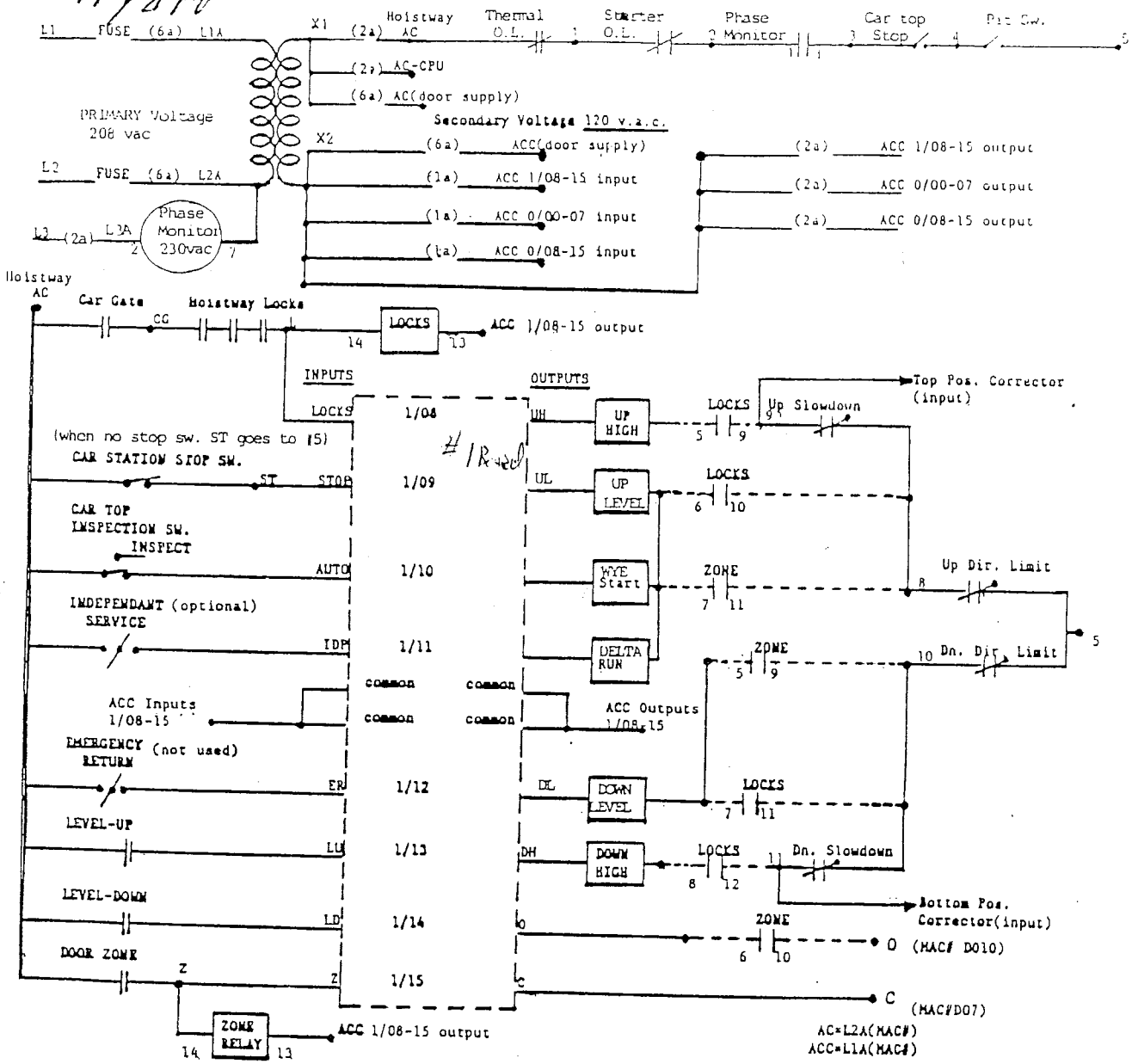

NOTE 1: When replacing the main CENTRAL PROCESSING UNIT BOARD (CPU), the factory jumper from 2716 to A-11 must be removed and a new jumper must be installed from A-11 to 2732. Also, the jumper from G to B must be removed and a new jumper must be installed from B to 3.

NOTE 2: When replacing an EXPANDER BOARD, the PAGE BIT TABLES must be used to have the proper communication between the CPU and the inputs and outputs on the EXPANDER BOARDS.

PAGE	PAGE BIT 1	2	4
0	x	x	x
1	do not use		
2	x	o	x
3	o	o	x
4	x	x	o
5	o	x	o
6	x	o	o
7	o	o	o

JUMPER	I/O BIT UPPER	LOWER
LOWER	O	X
UPPER	X	O

X = JUMPER

O = NO JUMPER

UPPER IS 8-15

LOWER IS 0-7

*UNLAWFUL TO COPY

PAGE BIT 124 LOWER

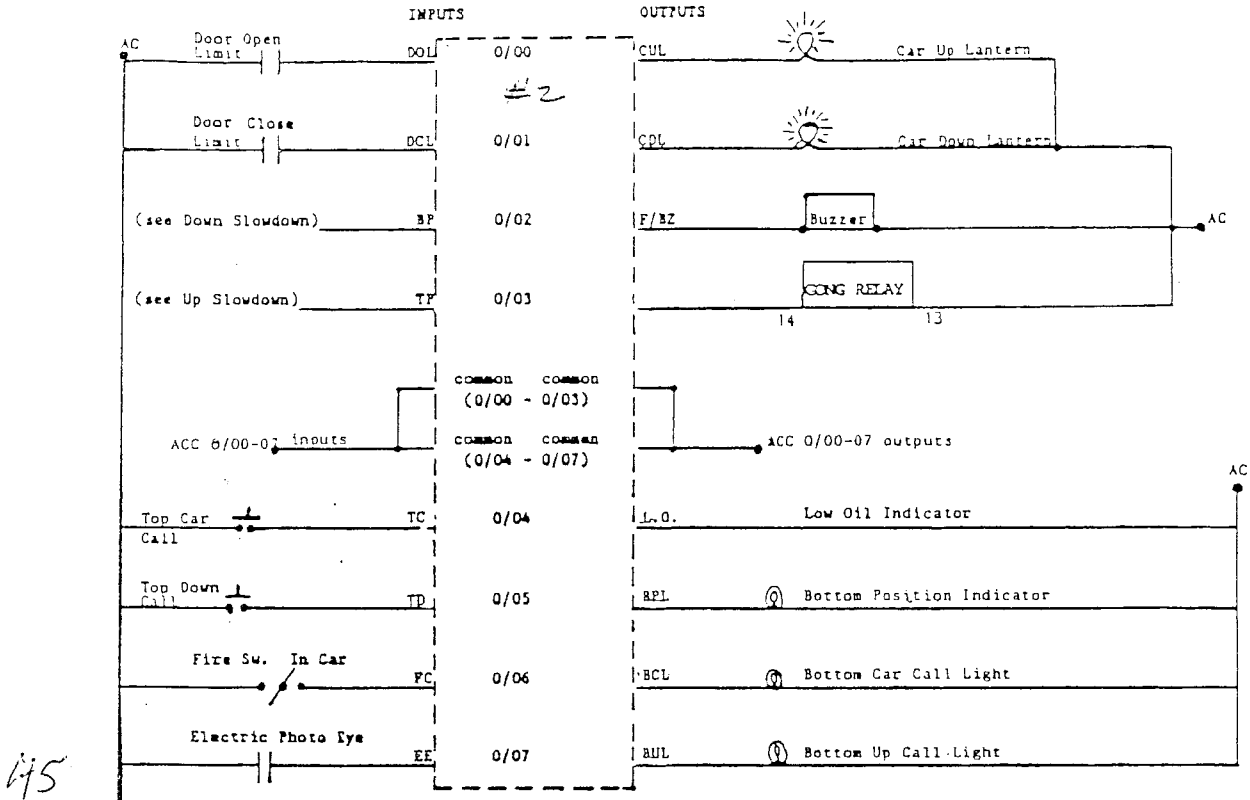

45

PAGE BIT 124 UPPER

46

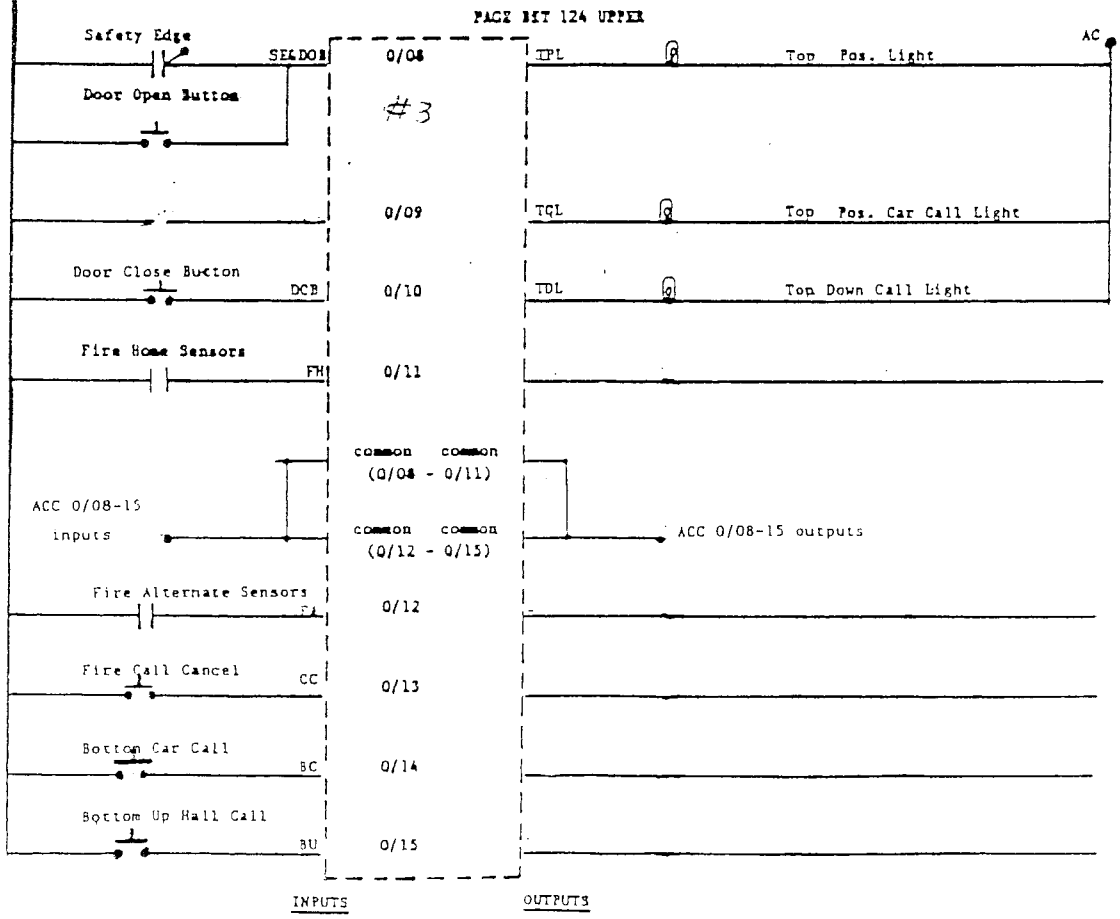

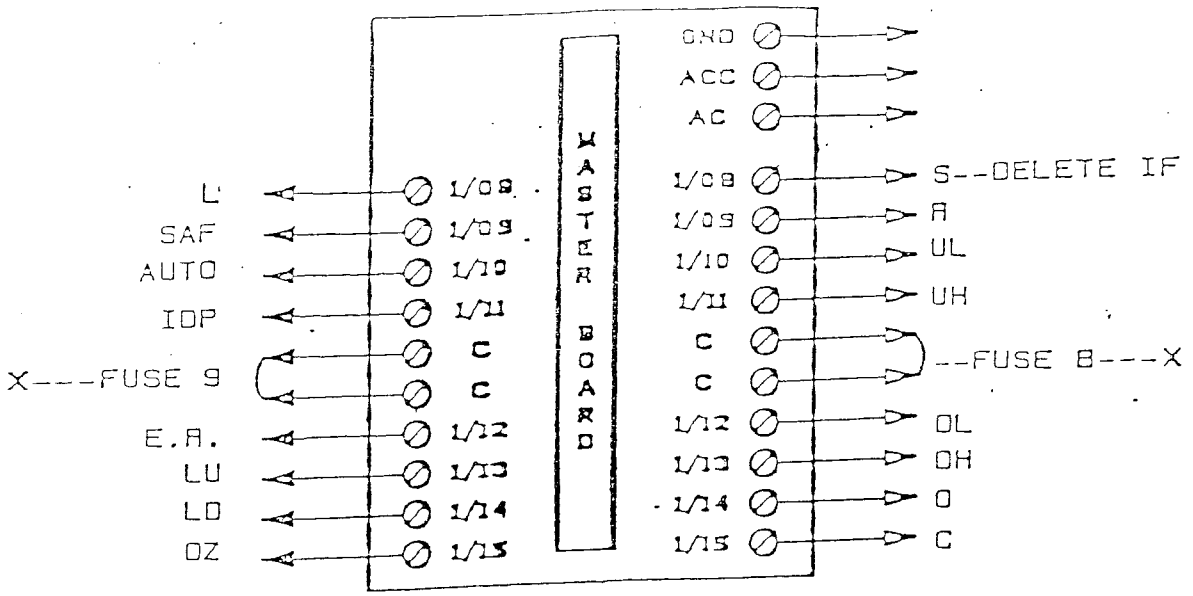

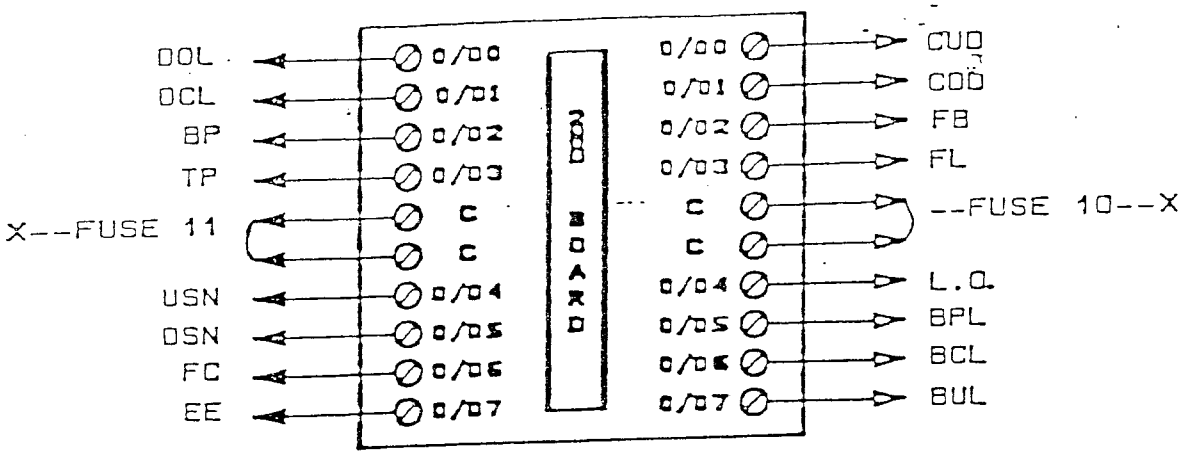

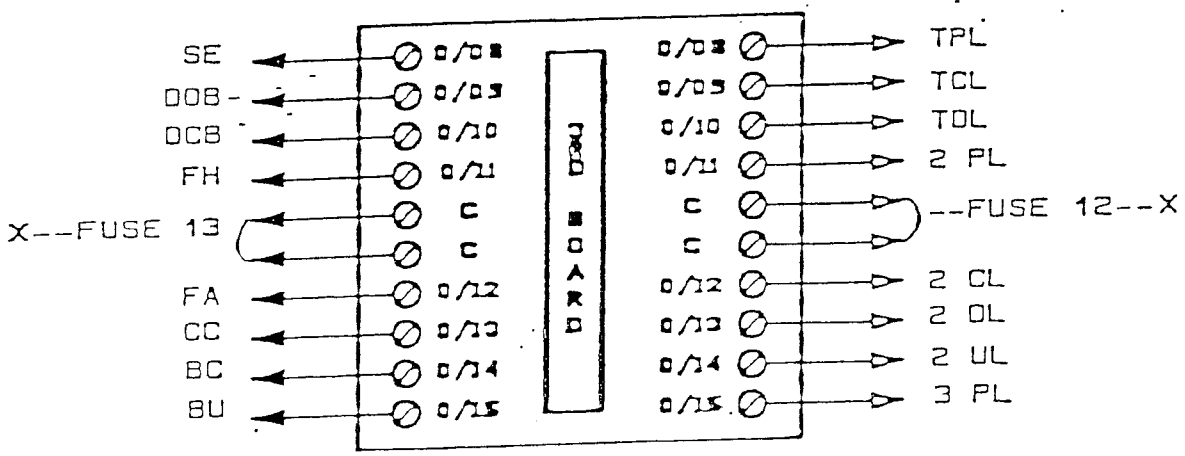

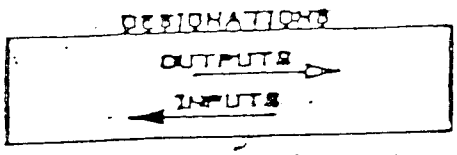

CIRCUITS STANDARD 3-9 w/o DA'S SHEETS

REV: —

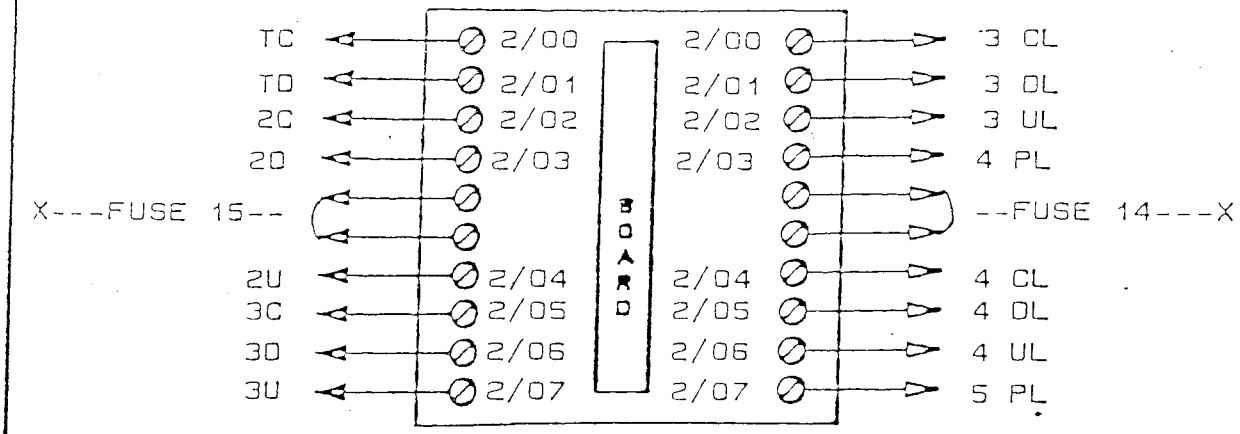

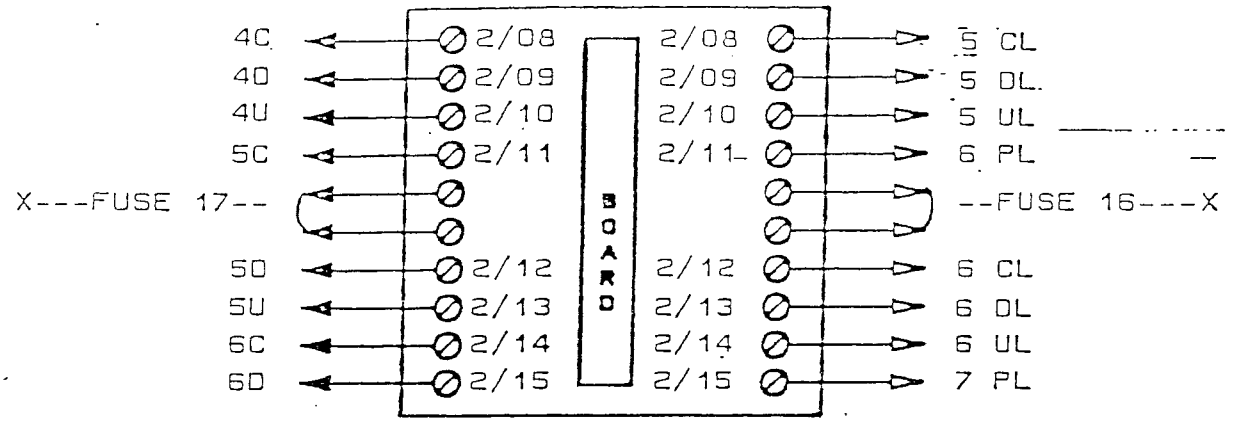

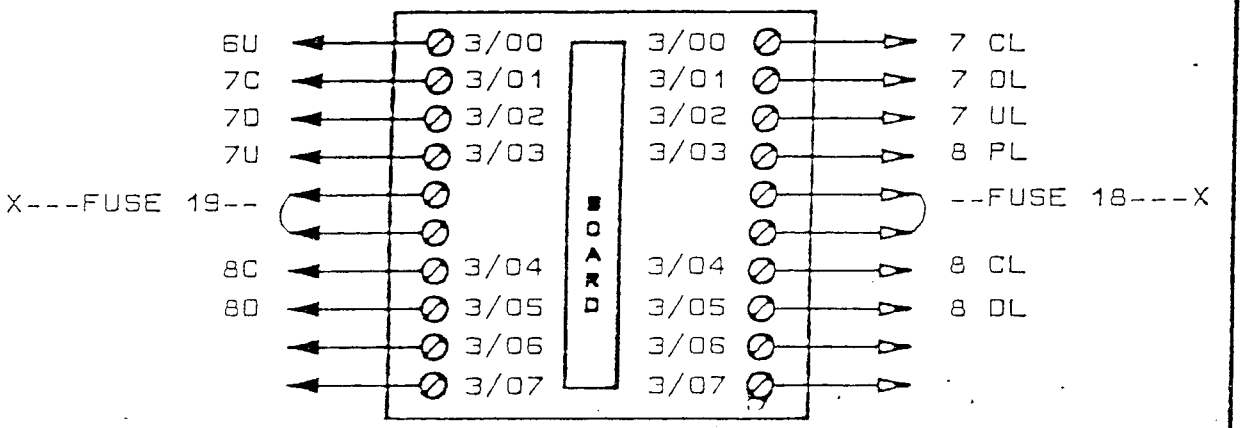

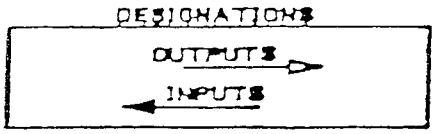

CIRCUIT:

PH-2

REV: -

SHEET:

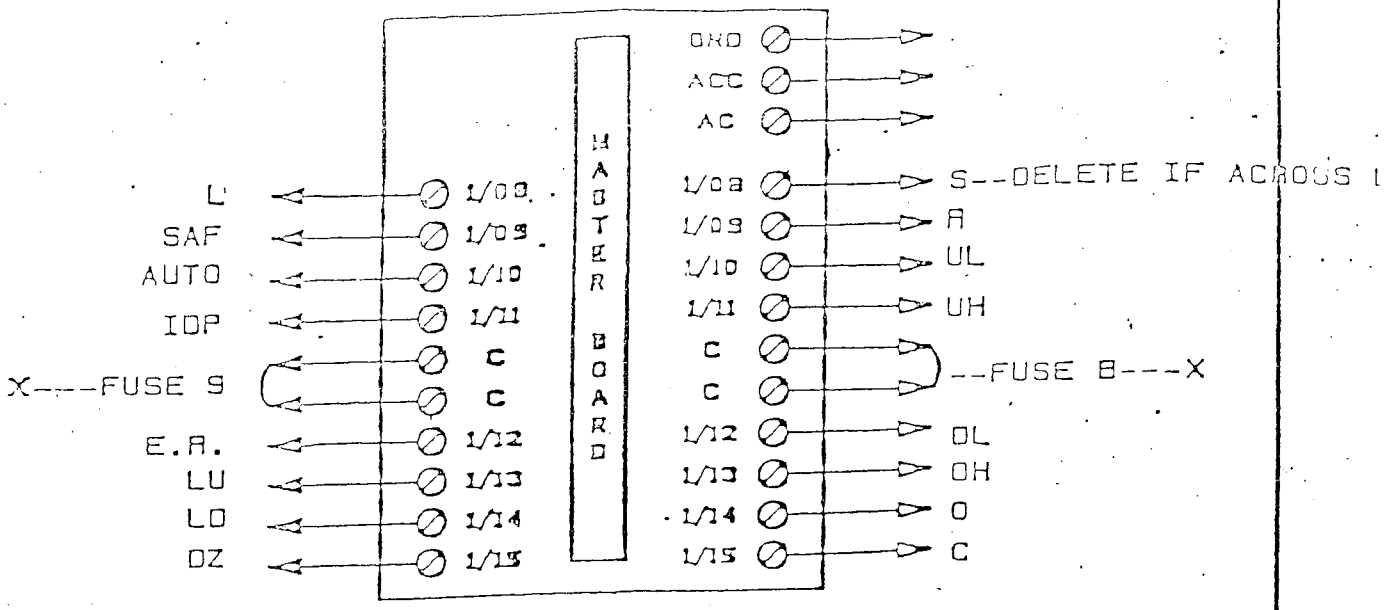

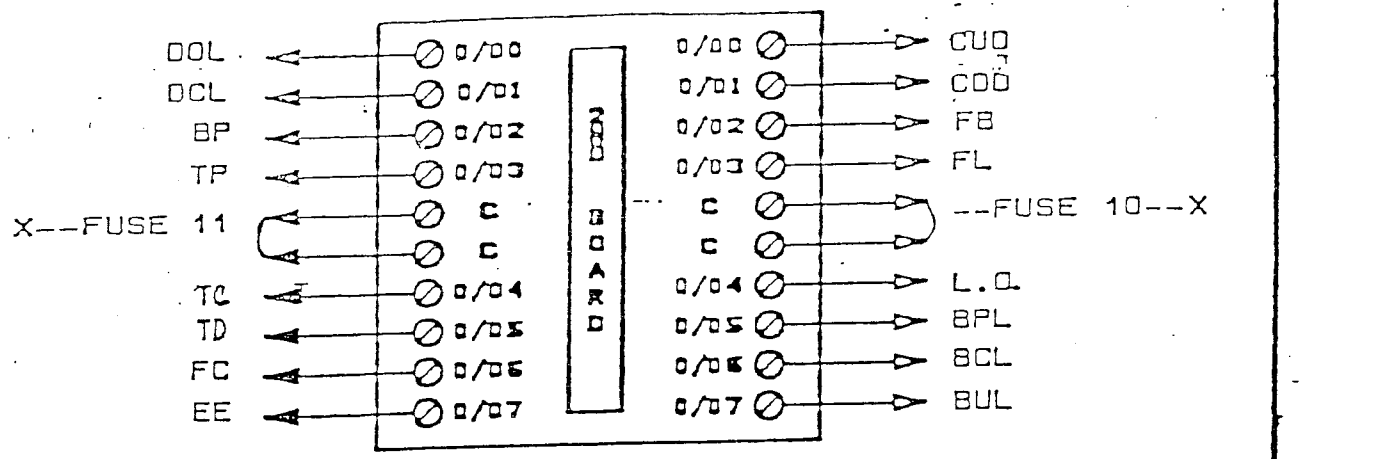

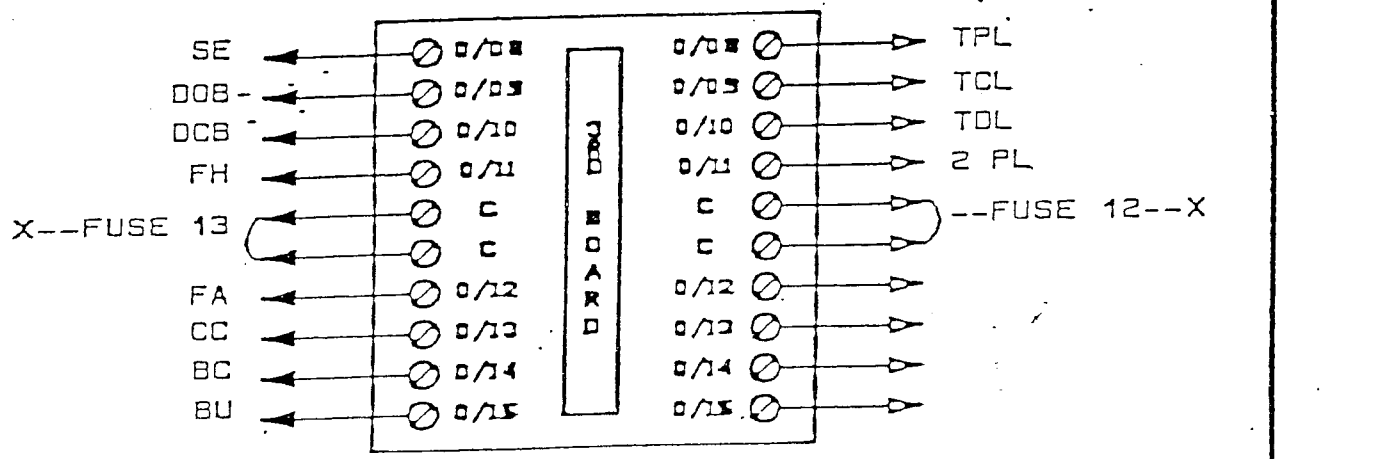

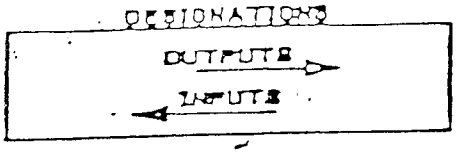

CIRCUITS STANDARD 2 STOP W/O DA'S

SHEETS

REV: —